RoHS Compliant

REV	ECN No.	DATE	REMARK
A	原始图档	2022.04.09	

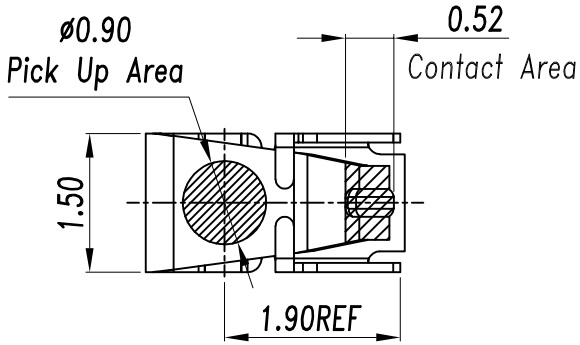

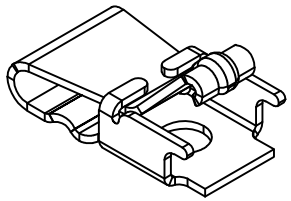

NOTES:
1:MATERIAL
1-1: SUS-304 THICKNE=0.10MM
2:SPECIFICATIONS
2-1: RATED CURRENT: 1.0A
2-2: VOLTAGE RATING: 1.5V
2-3: CONTACT RESISTANCE: 80mΩ/MAX
2-4: WELDING THRUST: ⩾ 3KG
2-5: OPERATING TEMPERATURE: -40°C~+85°C
3:DURABILITY: 1500 CYCLES
4:SALT SPRAY TIME: 24H
5:ELECTROPLATE: THE NICKEL-PLATED SUBSTRATE IS 50u" MIN
6:REQUIREMENTS
6-1:TERMINAL TO EAT FULL TIN,NOTPEELING,
WELDING OBVIOUS COLOR AND OTHED ADVERSE
6-2:ROHS、REACH、HF HALOGER ADVERSE OF DOMESTIC
AND INTERNATIONAL ENVIRONMNTAL REQUIREMENTS

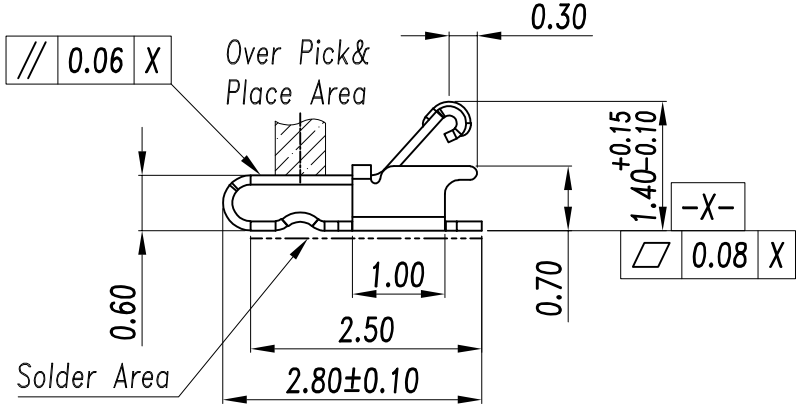

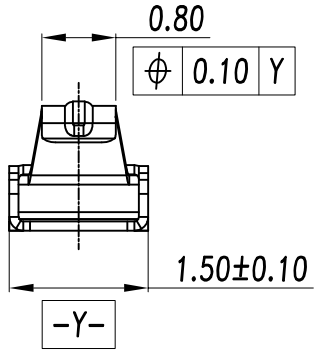

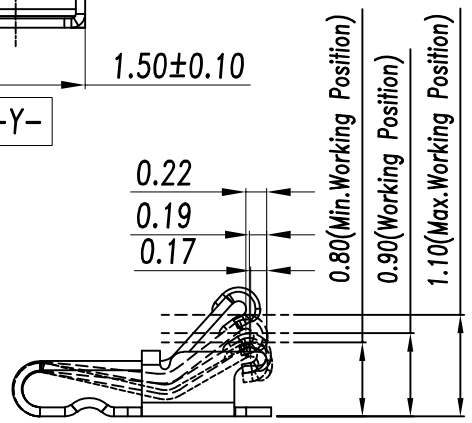

Stated At Compression
(FOR REFERENCE ONLY)

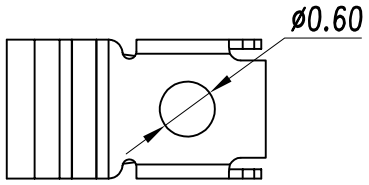

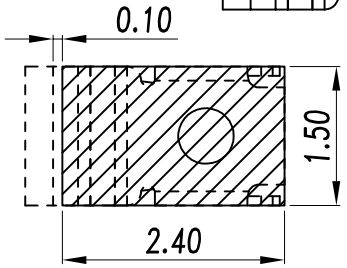

RECOMMENDED PCB LAYOUT
TOLERANCE:±0.05MM
(FOR REFERENCE ONLY)

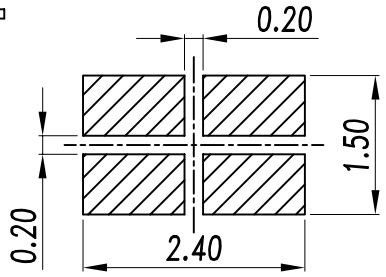

METAL MASK T=0.08
TOLERANCE:±0.05MM
(FOR REFERENCE ONLY)

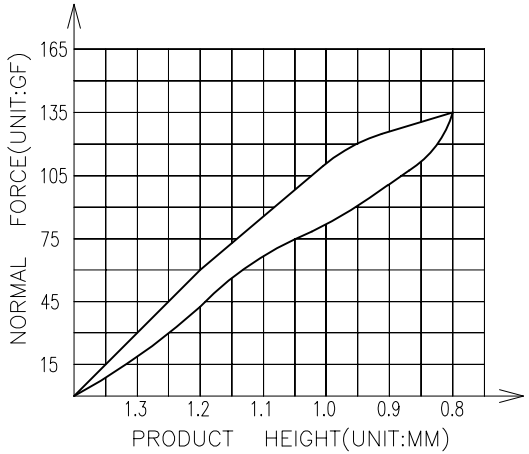

MATERIAL NO.:
JK-0R1400AG009R
REVIEW TABLE FOR DETAILS

QUALITY SYMBOL
C = 0
12

GENERAL TOLERANCES (UNLESS SPECIFIED)

X. ±0.25	X. ±4.0°
.X ±0.20	.X ±3.0°
.XX ±0.15	.XX ±2.0°

THIS DRAWING CONTAINS INFORMATION THAT IS PROPRIETARY TO J K F Technology Co.,Ltd. AND SHOULD NOT BE USED WITHOUT WRITTEN PERMISSION

TITLE
天线弹片
L2.80*W1.50*H1.40

ECN DESCRIPTION
RELEASE TO TOOLING

DRAWN BY KATE DENG DATE

CHECKED BY FAND DATE -----

APPROVED BY Wang Yan DATE ------

JKF connectivity J K F Technology Co.,Ltd

DOCUMENT NO.

SHEET NO. 1 OF 2

DIMENSION STYLE MM ONLY | DESIGN UNITS METRIC | SCALE 10:1

THIRD ANGLE PROJECTION

frame size: A4
Rev.A 2022.04.09

RoHS Compliant

REV	ECN No.	DATE	REMARK
A	原始图档	2022.04.09	

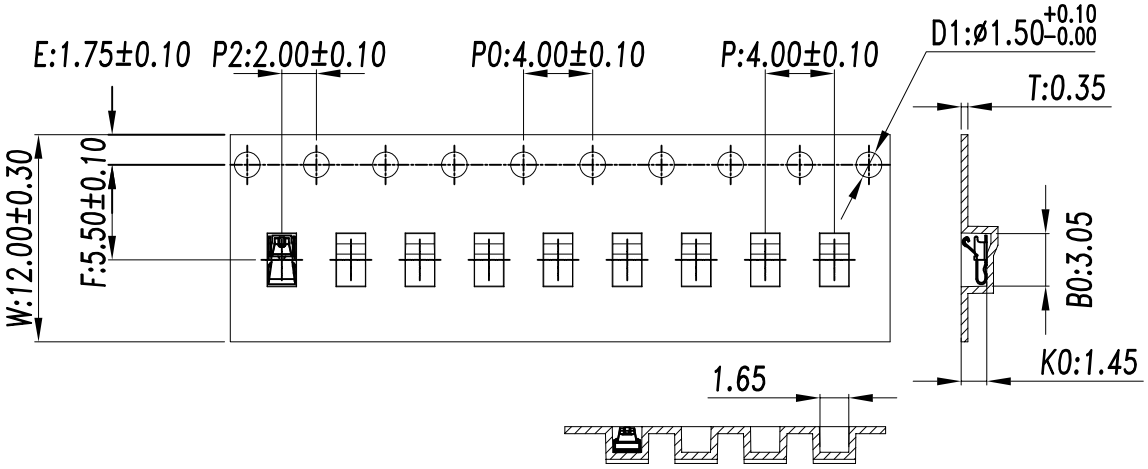

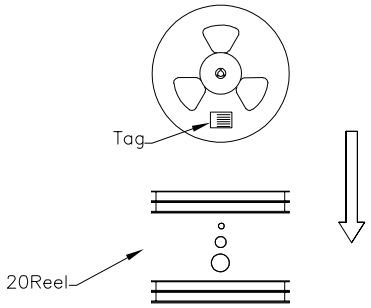

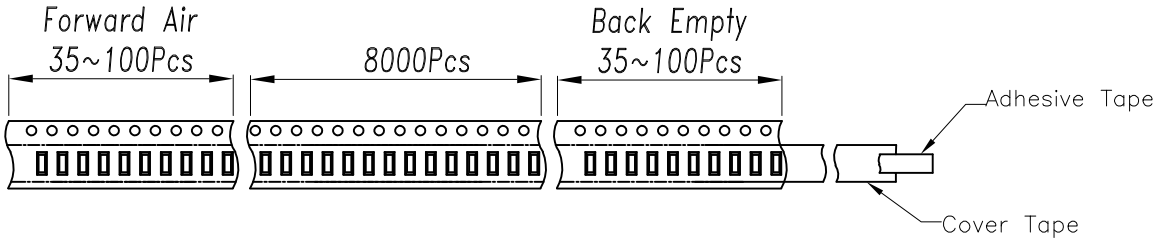

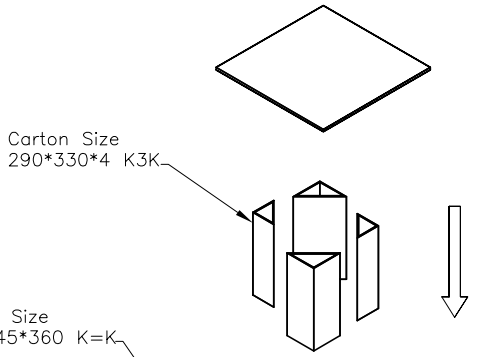

Customer To Use Direction

Pull Out Direction
(出料方向)

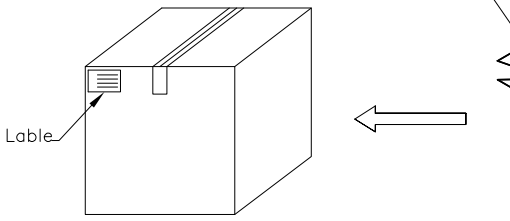

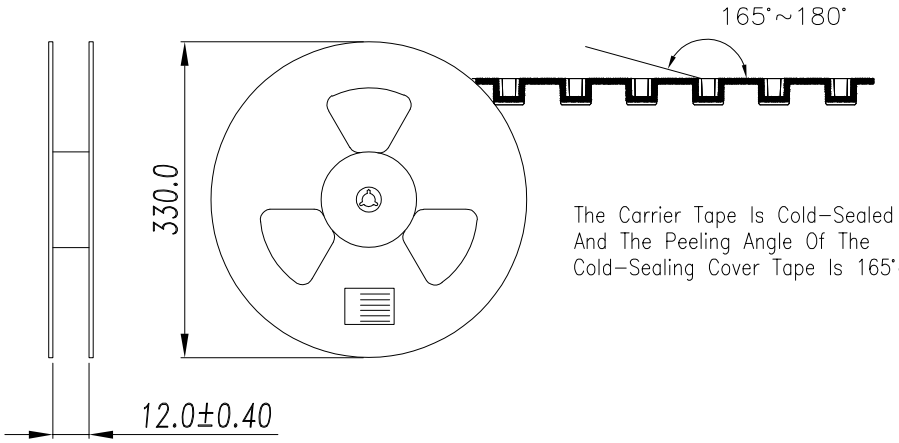

The Carrier Tape Is Cold-Sealed
And The Peeling Angle Of The
Cold-Sealing Cover Tape Is 165°~180°.

MATERIAL NO.:
JK-0R1400AG009R
REVIEW TABLE FOR DETAILS

QUALITY SYMBOL
C = 0
= 12

GENERAL TOLERANCES (UNLESS SPECIFIED)

X. ±0.25	X. ±4.0°
.X ±0.20	.X ±3.0°
.XX ±0.15	.XX ±2.0°

THIS DRAWING CONTAINS INFORMATION THAT IS PROPRIETARY TO J K F Technology Co.,Ltd. AND SHOULD NOT BE USED WITHOUT WRITTEN PERMISSION

TITLE
天线弹片
L2.80*W1.50*H1.40

ECN DESCRIPTION
RELEASE TO TOOLING

DRAWN BY KATE DENG DATE

JKF connectivity J K F Technology Co.,Ltd

CHECKED BY FAND DATE -----

DOCUMENT NO.

SHEET NO. 2 OF 2

APPROVED BY Wang Yan DATE ------

DIMENSION STYLE	DESIGN UNITS	SCALE
MM ONLY	METRIC	10:1

THIRD ANGLE PROJECTION