RoHS Compliant

REV	ECN No.	DATE	REMARK
A	原始图档	2022.04.09	

NOTES:
(1)MATERIAL:STAINLESS STEEL THICKNE=0.10MM
(2)PRODUCT SPECIFICATIONS:
2-1:CONTACT RESISTANCE: 80mΩ/MAX
2-2:RATED CURRENT: 1.0A/MAX
2-3:VOLTAGE RATING: 1.50V/AC/DC/MAX
2-4:WELDING THRUST: ≥3KG
2-5:DURABILITY: 1500 CYCLES
2-6:OPERATING TEMPERATURE: -40°C~+85°C
(3):SALT SPRAY: 24 HOURS
(4):FINISH:50U"MIN NICKEL UNDER RLATING OVER ALL.
(5):REQUIREMENTS
5-1:TERMINAL TO EAT FULL TIN,NOTPEELING, WELDING OBVIOUS COLOR AND OTHED ADVERSE
5-2:ROHS,REACH,HF HALOGER ADVERSE OF DOMESTIC AND INTERNATIONAL ENVIRONMNTAL REQUIREMENTS

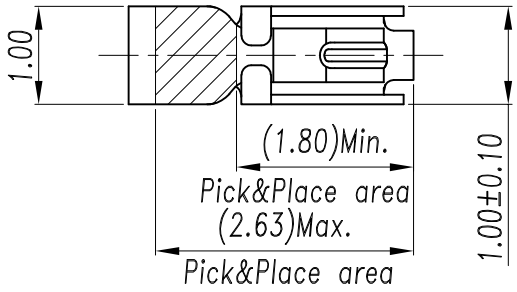

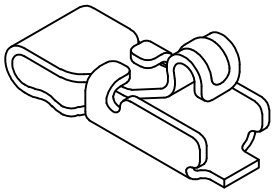

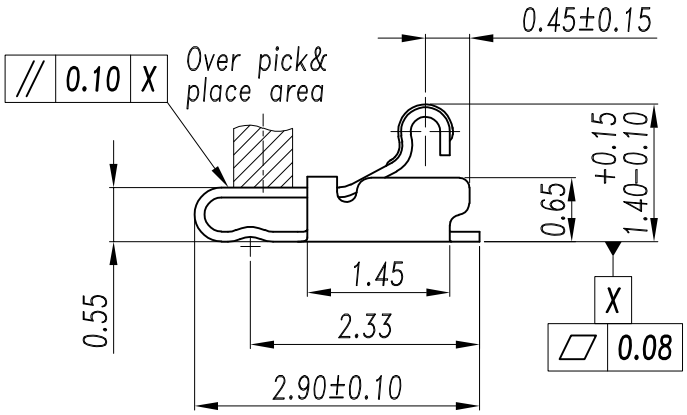

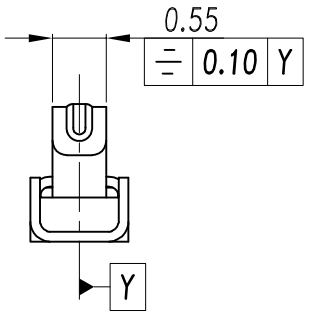

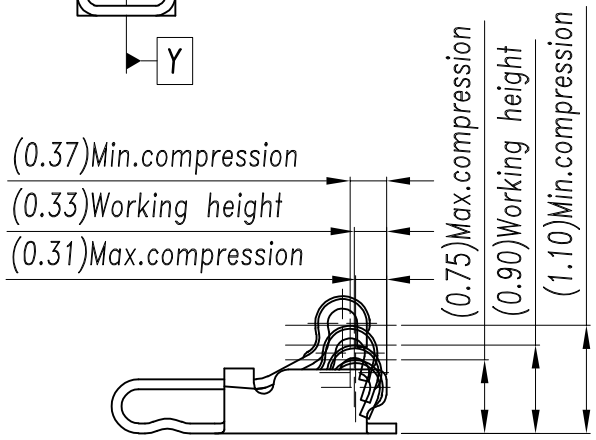

NORMAL FORCE PROFILE:

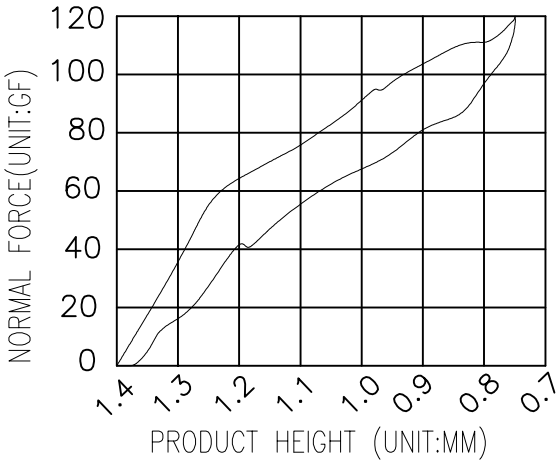

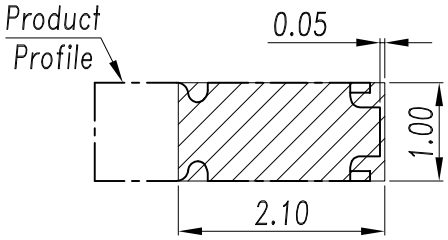

RECOMMENDED PCB LAYOUT
TOLERANCE±0.05(焊盘推荐图)

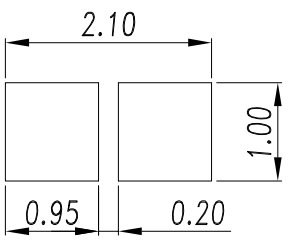

METAL MASK T=0.10
TOLERANCE±0.05(钢网推荐图)

MATERIAL NO.:
JK-0R1400AG0010R
REVIEW TABLE FOR DETAILS

QUALITY SYMBOL: C = 0, 12

GENERAL TOLERANCES (UNLESS SPECIFIED)

X. ±0.25	X. ±4.0°
.X ±0.20	.X ±3.0°
.XX ±0.15	.XX ±2.0°

THIS DRAWING CONTAINS INFORMATION THAT IS PROPRIETARY TO J K F Technology Co.,Ltd. AND SHOULD NOT BE USED WITHOUT WRITTEN PERMISSION

TITLE: H1.40 Antenna spring terminal,T=0.10mm FOR CUSTOMER

ECN DESCRIPTION: RELEASE TO TOOLING

DRAWN BY: KATE DENG DATE:

CHECKED BY: FAND DATE: -----

APPROVED BY: Wang Yan DATE: ------

JKF connectivity J K F Technology Co.,Ltd

DOCUMENT NO.

SHEET NO. 1 OF 2

DIMENSION STYLE: MM ONLY | DESIGN UNITS: METRIC | SCALE: 10:1

THIRD ANGLE PROJECTION

frame size: A4
Rev.A 2022.04.09

RoHS Compliant

REV	ECN No.	DATE	REMARK
A	原始图档	2022.04.09	

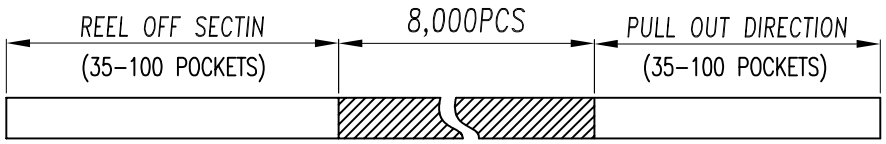

CONN. QTY./REEL	REEL QTY./CARTON	CONN. QTY./CARTON
8,000	20	160,000

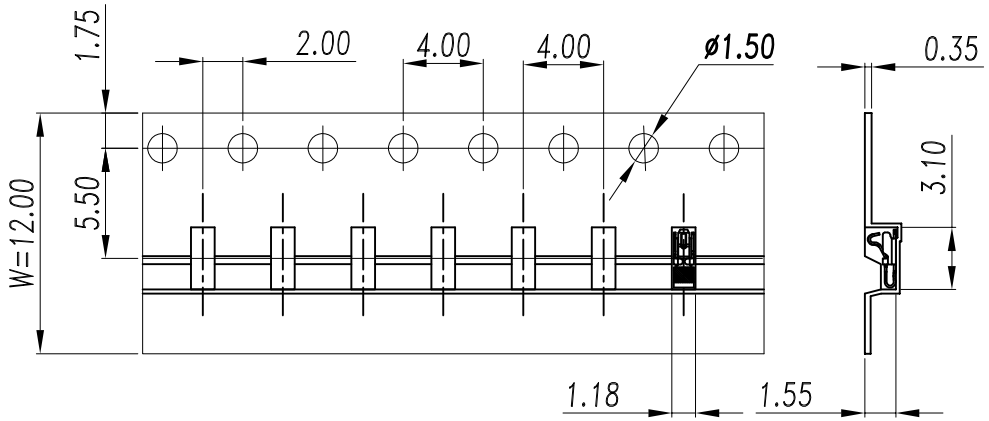

PRODUCT PACKAGING DIRECTION
CUSTOMER TO USE DIRECTION

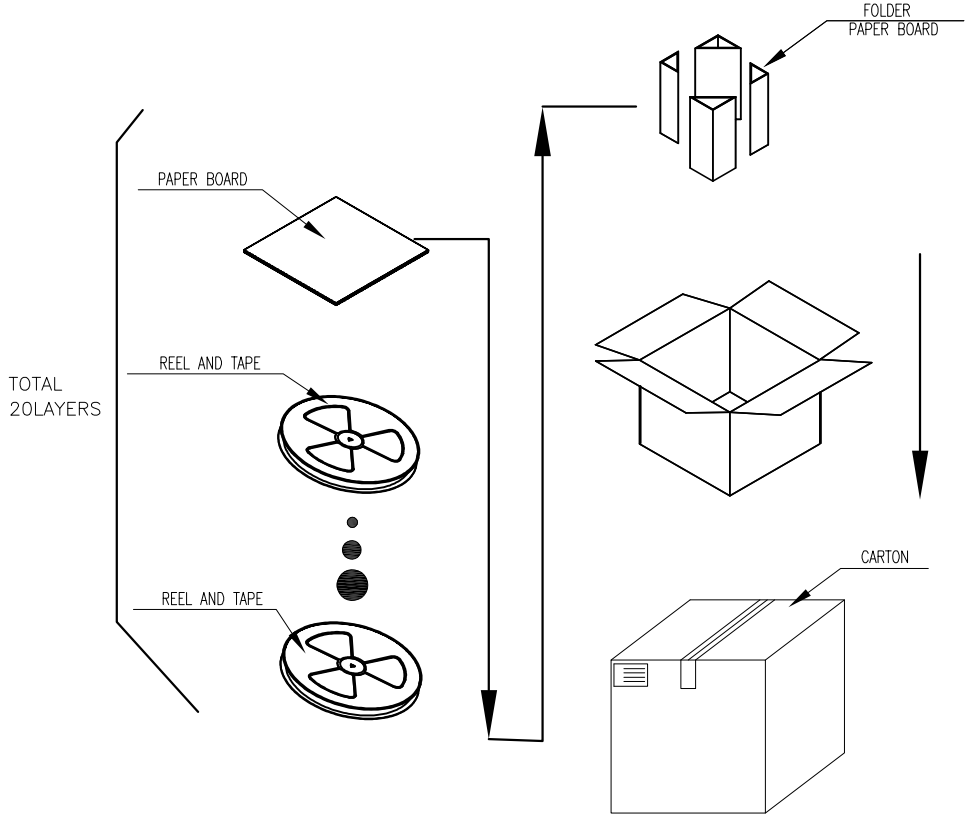

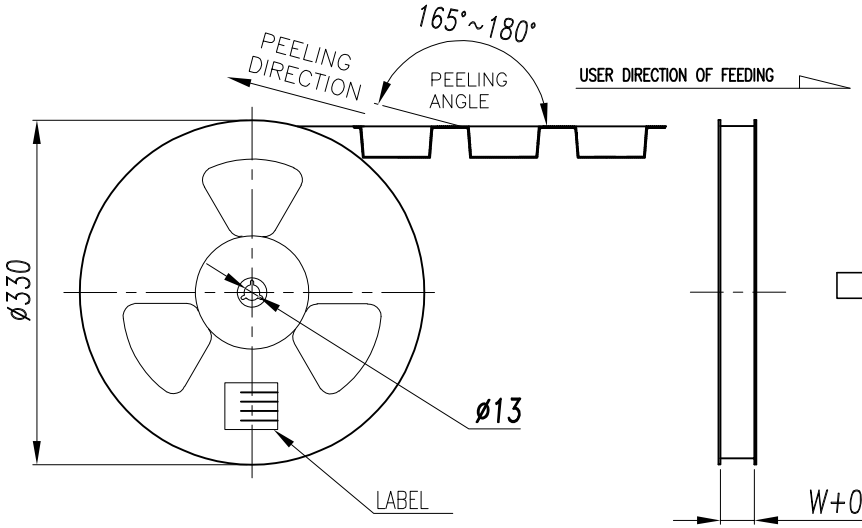

MATERIAL NO.:
JK-0R1400AG0010R
REVIEW TABLE FOR DETAILS

QUALITY SYMBOL
C = 0
12

GENERAL TOLERANCES (UNLESS SPECIFIED)

X. ±0.25	X. ±4.0°
.X ±0.20	.X ±3.0°
.XX ±0.15	.XX ±2.0°

THIS DRAWING CONTAINS INFORMATION THAT IS PROPRIETARY TO J K F Technology Co.,Ltd. AND SHOULD NOT BE USED WITHOUT WRITTEN PERMISSION

TITLE: H1.40 Antenna spring terminal,T=0.10mm FOR CUSTOMER

ECN DESCRIPTION: RELEASE TO TOOLING

DRAWN BY: KATE DENG DATE:

CHECKED BY: FAND DATE: -----

APPROVED BY: Wang Yan DATE: ------

JKF connectivity J K F Technology Co.,Ltd

DOCUMENT NO.

SHEET NO. 2 OF 2

DIMENSION STYLE: MM ONLY

DESIGN UNITS: METRIC

SCALE: 10:1

THIRD ANGLE PROJECTION

frame size: A4
Rev.A 2022.04.09